REVISIONS			
REV	DESCRIPTION	DATE	APPROVED
02_0	REVISED PER ECN 72-0068	CMH 10/8/99	S. Morby

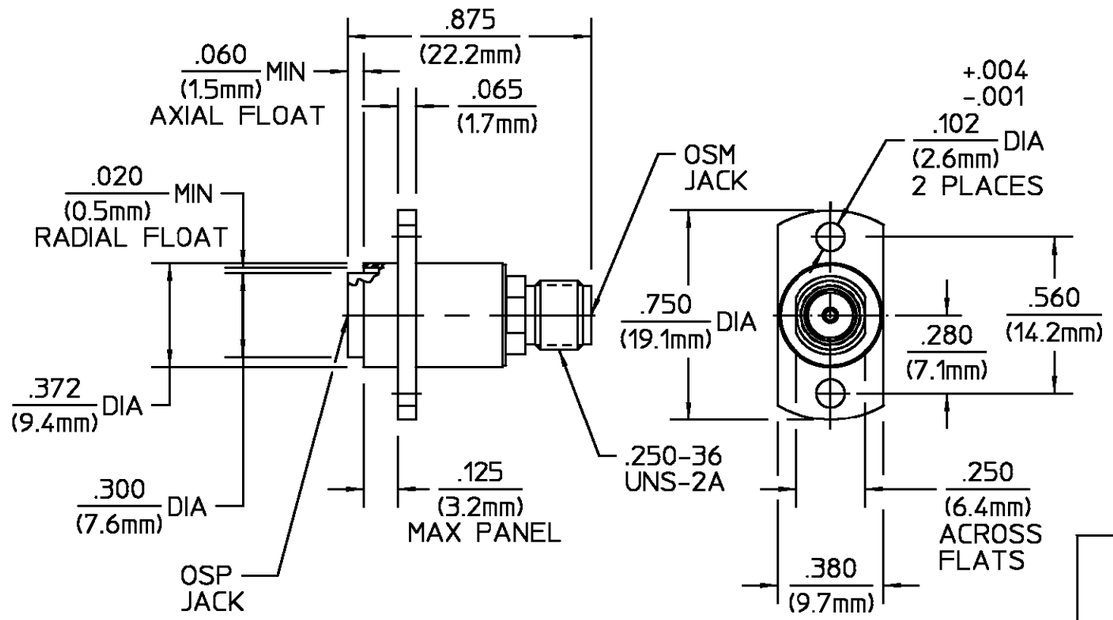

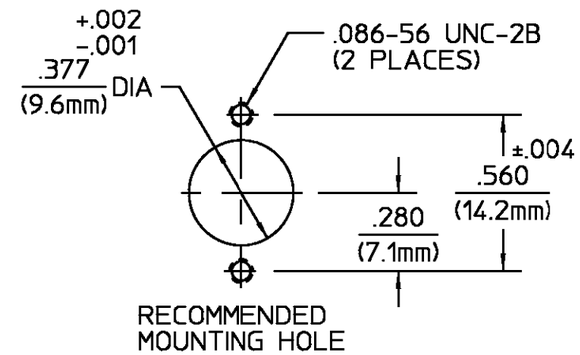

COMPONENT	MATERIAL	FINISH
HOUSING BUSHING	STAINLESS STEEL PER ASTM-A484 AND ASTM-A582, TYPE 303	PASSIVATE PER QQ-P-35
SPRING	STAINLESS STEEL PER	PASSIVATE PER QQ-P-35
DIELECTRIC	PTFE FLUOROCARBON PER ASTM-D-1457	N/A
CENTER CONTACT CONTACT SLEEVE	BERYLLIUM COPPER PER ASTM-B-196 OR ASTM-B-197, ALLOY C17300, CONDITION H	GOLD PLATE PER MIL-G-45204
RETAINING RING	BERYLLIUM COPPER PER ASTM-B-194, ALLOY C17200, CONDITION H	GOLD PLATE PER MIL-G-45204
RETAINING RING	BERYLLIUM COPPER PER ASTM-B-194, ALLOY C17200, CONDITION H	NICKEL PLATE QQ-N-290

ELECTRICAL	
Nominal Impedance (Ohms)	50
Frequency Range (GHz) DC to	18
Volt Rating (VRMS MAX)	
@ Sea Level	335
VSWR	1.05 + .005 F(GHz)
Insertion Loss (dB MAX)	$.06\sqrt{f(GHz)}$
RF Leakage (dB MIN)	-60 @ 2-3 GHz
Corona, 70,000 Ft (VRMS MIN)	250
Dielectric Withstanding Voltage	
(VRMS MIN) @ Sea Level	1000
Contact Resistance (Milliohms MAX)	
Center Contact	4.0
Outer Contact	2.0
RF High Potential @ Sea Level	
(VRMS MIN @ 5 MHz)	670
I.R.(Megohms MIN)	5000

MECHANICAL	
Interface Dimensions	
OSM	MIL-STD-348A, Fig 310.2
OSP	SEE CATALOG
Mating Characteristics (OSP & OSM):	
Insertion (MAX Lbs)	3
Withdrawal (MIN Oz)	1
Force to Engage:	
OSM (In-Lbs MAX)	2.0
OSP (Lbs MAX)	3.0
Force to Disengage:	
OSM (In-Lbs MAX)	2.0
OSP (Lbs MAX)	1.5
Contact Retention	
Axial (Lbs)	6.0
Radial (In-Oz)	N/A
Weight (Grams)	TBD

ENVIRONMENTAL
Temperature Rating -65°C to +165°C
Vibration MIL-STD-202, Method 204, Condition D.
Shock MIL-STD-202, Method 213, Condition I.
Thermal Shock MIL-STD-202, Method 107, Condition B,
Moisture Resistance MIL-STD-202, Method 106
Corrosion - MIL-STD-202, Method 101, Condition B, 5% salt spray

UNLESS OTHERWISE SPECIFIED DIMENSIONS ARE IN INCHES
TOLERANCE ON
FRAC. ± 1/64 DEC. ±.005 ANGLES ± 1°

DRAWN BY SWA DATE 10/9/84
CHECKED BY DAC 10/9/84
APP'D BY 10/9/84

AMP

AMP Incorporated
140 Fourth Avenue
Waltham, MA 02451-7599

These drawings and specifications are the property of AMP Incorporated and shall not be reproduced or copied or used in whole or in part as the basis for the manufacture or sale of item(s) without written permission.

USE ASS'Y PROCEDURE

NO. A.P. N/A

TITLE OSP JACK TO OSM JACK FLOAT PANEL FEEDTHROUGH FLANGE MOUNT ADAPTER

SIZE	CODE IDENT NO.		REV
B	26805	4584-2242-02	02_0
SCALE 2:1			SHEET 1 OF 1

CUSTOMER DRAWING

AMP PART # 1059731-1
SHEET 1 OF 1 REV A